9907130

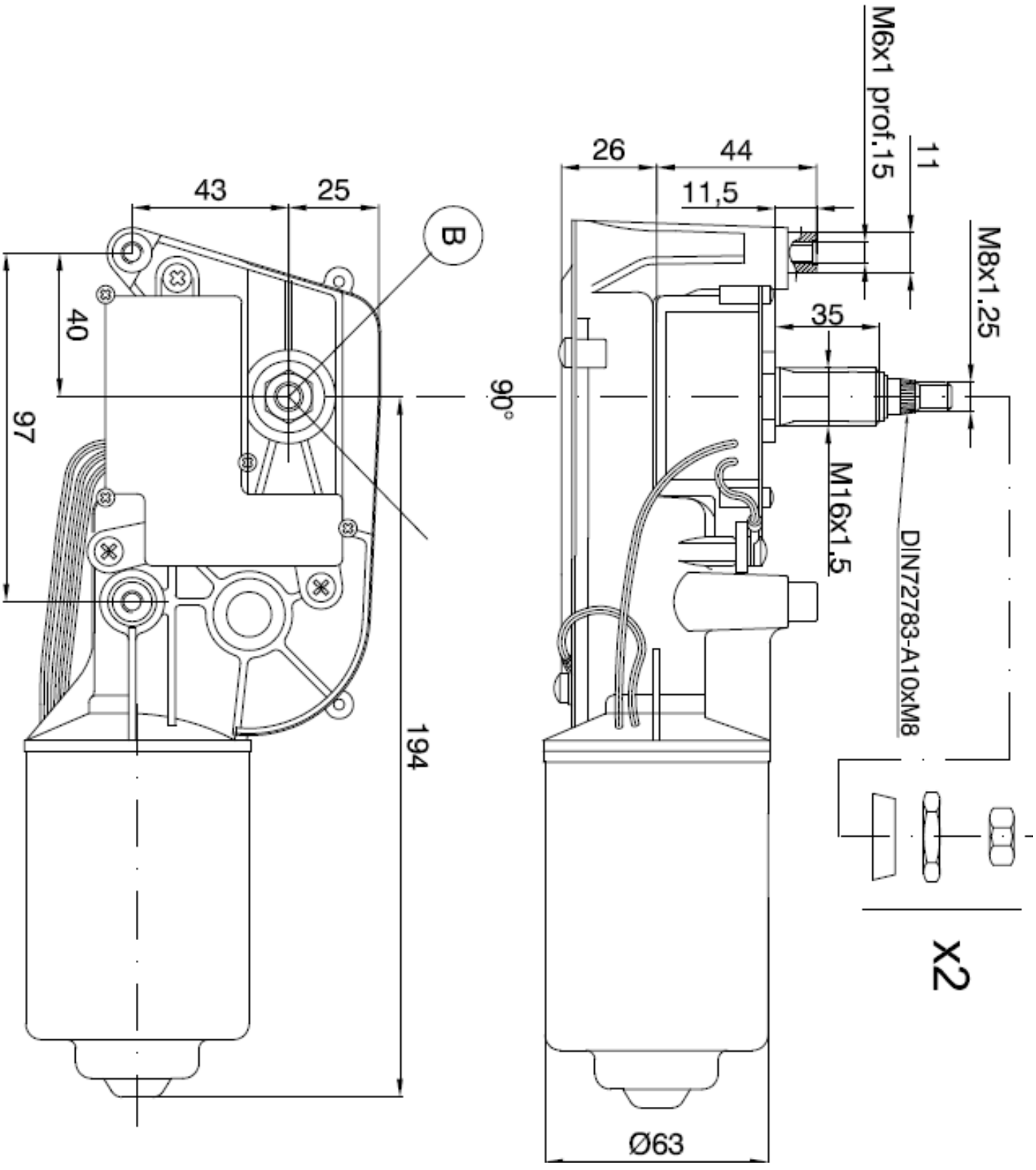

PART NUMBER	VOLTAGE (V) DC	NOMINAL TORQUE (Nm)	STARTING TORQUE (Nm)	NO LOAD SPEED (RPM)	OUTPUT POWER (W)
9907130	12	1,8	18	35-50	-