9913020

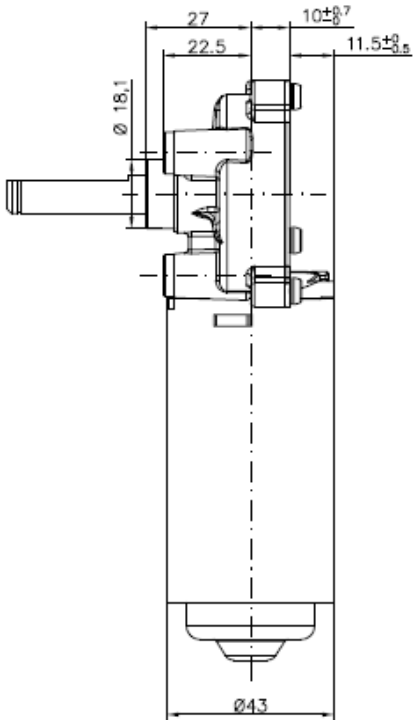

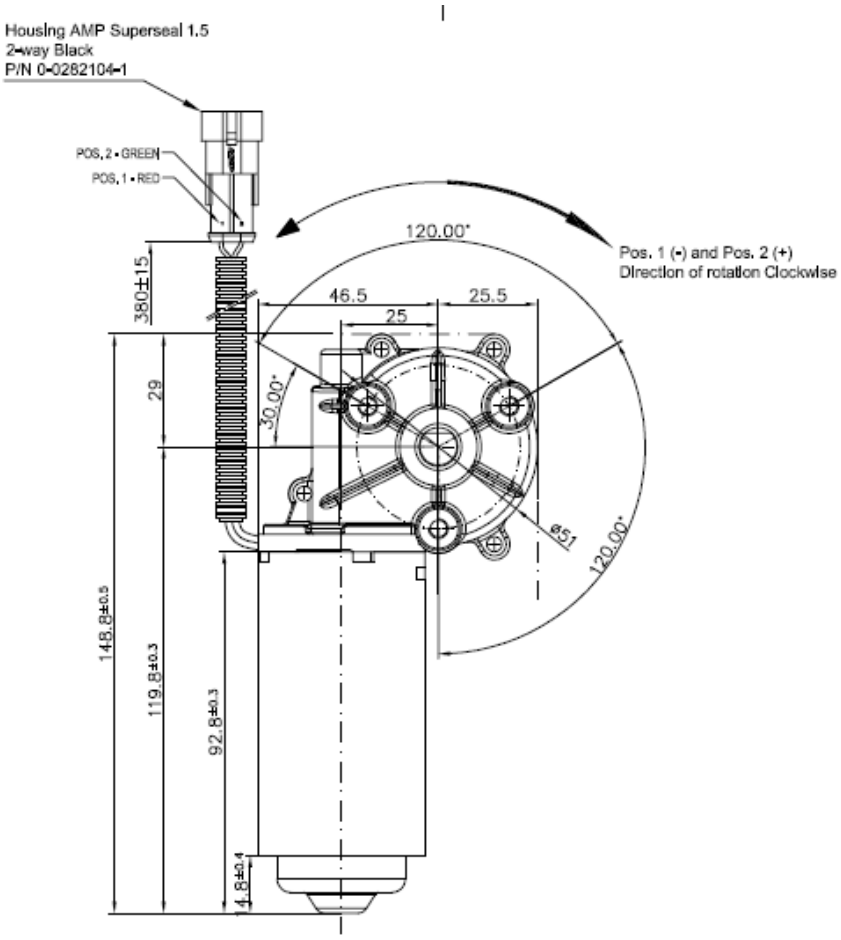

PART NUMBER	VOLTAGE (V) DC	NOMINAL TORQUE (Nm)	STARTING TORQUE (Nm)	NO LOAD SPEED (RPM)	OUTPUT POWER (W)
9913020	12	1	5	79	-